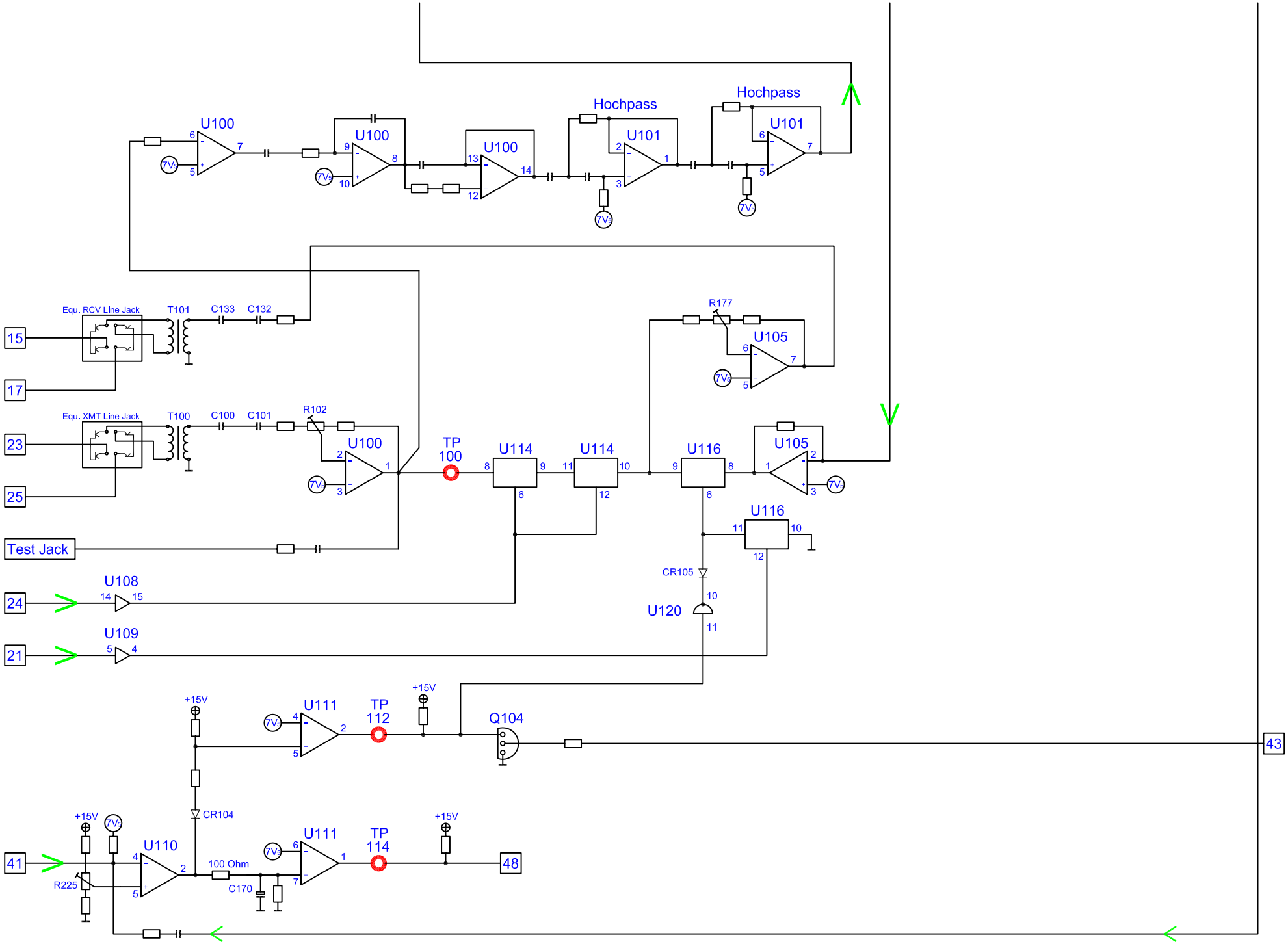
U100
U100
U100
Hochpass
U101
Hochpass
U101
7Vs
Equ. RCV Line Jack
T101
C133
C132
15
17
Equ. XMT Line Jack
T100
C100
C101
R102
23
25
Test Jack
TP 100
U114
U114
U116
U116
R177
U105
U105
CR105
U120
U108
U109
24
21
+15V
U111
TP 112
Q104
43
CR104
U110
R225
41
100 Ohm
C170
U111
TP 114
48