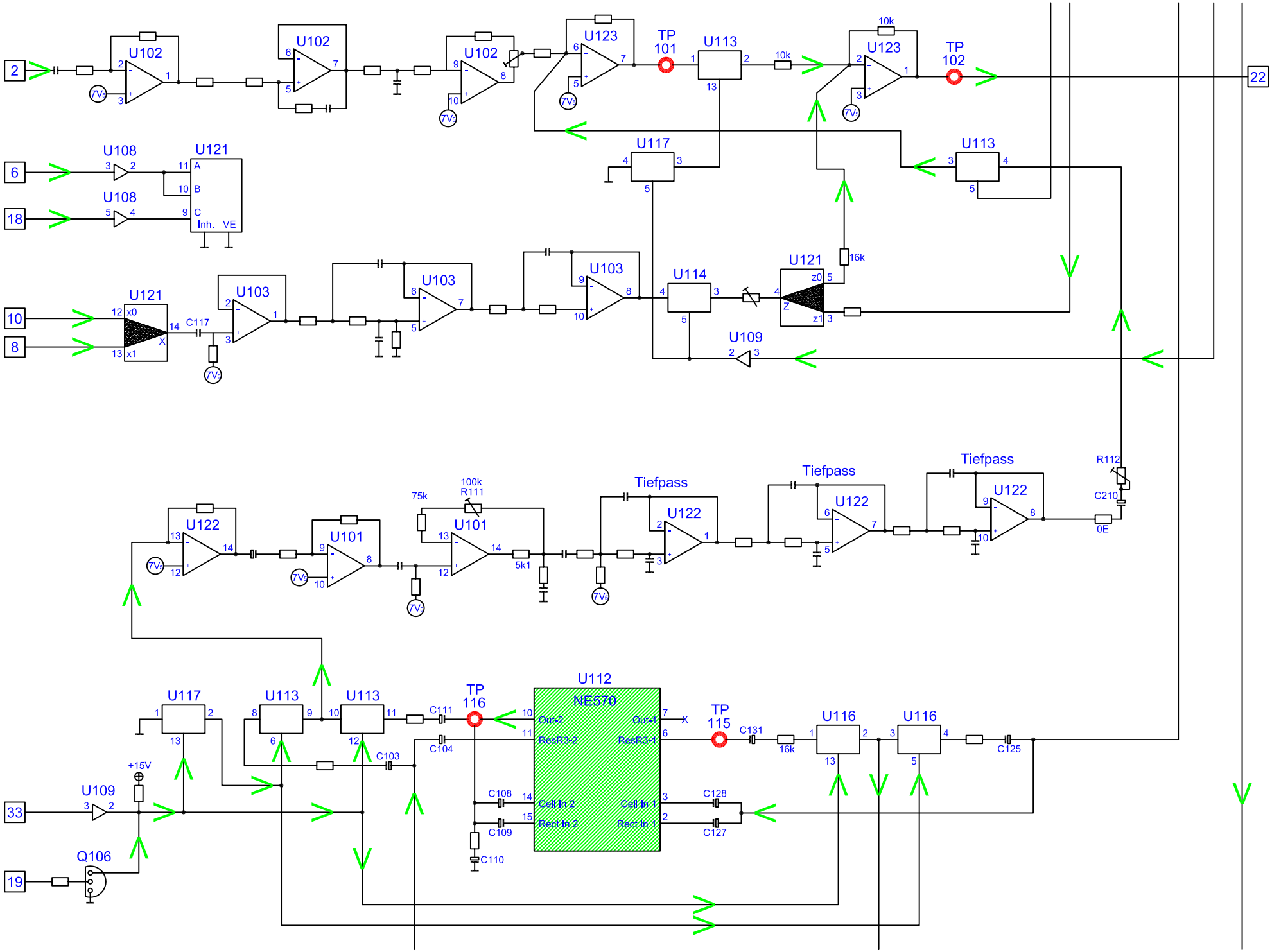
2
6
18
10
8
33
19
22
U102
U123
TP 101
U113
10k
TP 102
U108
U121
Inh.
VE
U117
U103
U114
16k
U109
C117
7Vs
Tiefpass
U122
R112
C210
0E
100k
R111
75k
U101
5k1
U112
NE570
Out-2
ResR3-2
Out-1
ResR3-1
Cell In 2
Rect In 2
Cell In 1
Rect In 1
TP 116
TP 115
C111
C104
C103
C108
C109
C110
C128
C127
C131
C125
+15V
Q106