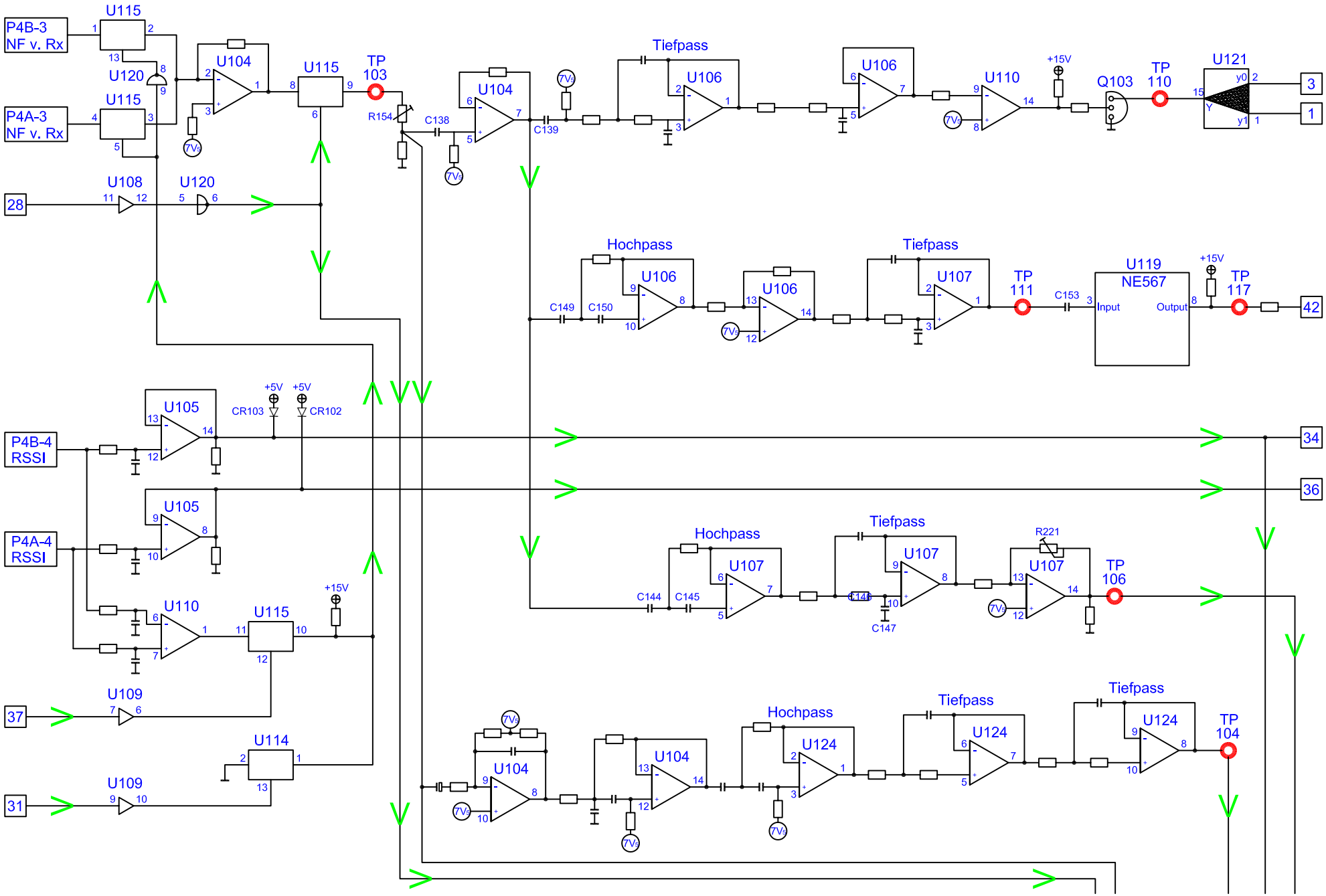
P4B-3
NF v. Rx
P4A-3
NF v. Rx
U115
U120
U104
TP
103
R154
C138
C139
7Vs
Tiefpass
U106
U110
+15V
Q103
TP
110
U121
y0
y1
Y
3
1
28
U108
Hochpass
C149
C150
TP
111
C153
U119
NE567
Input
Output
TP
117
42
U105
CR103
CR102
+5V
P4B-4
RSSI
P4A-4
RSSI
34
36
U107
C144
C145
C146
C147
R221
TP
106
37
U109
U114
31
TP
104
U124