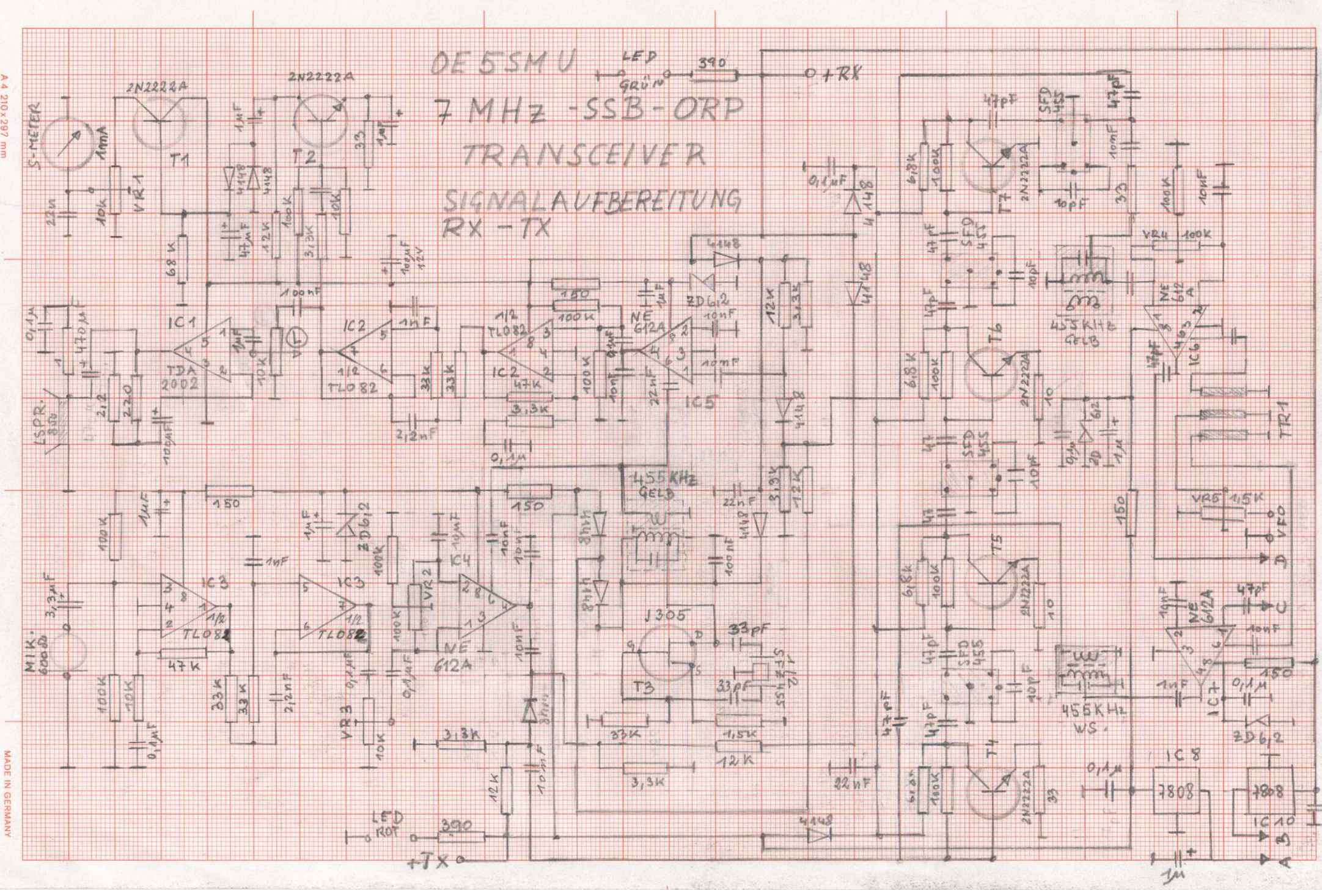

A 4 210 x 297 mm

MADE IN GERMANY